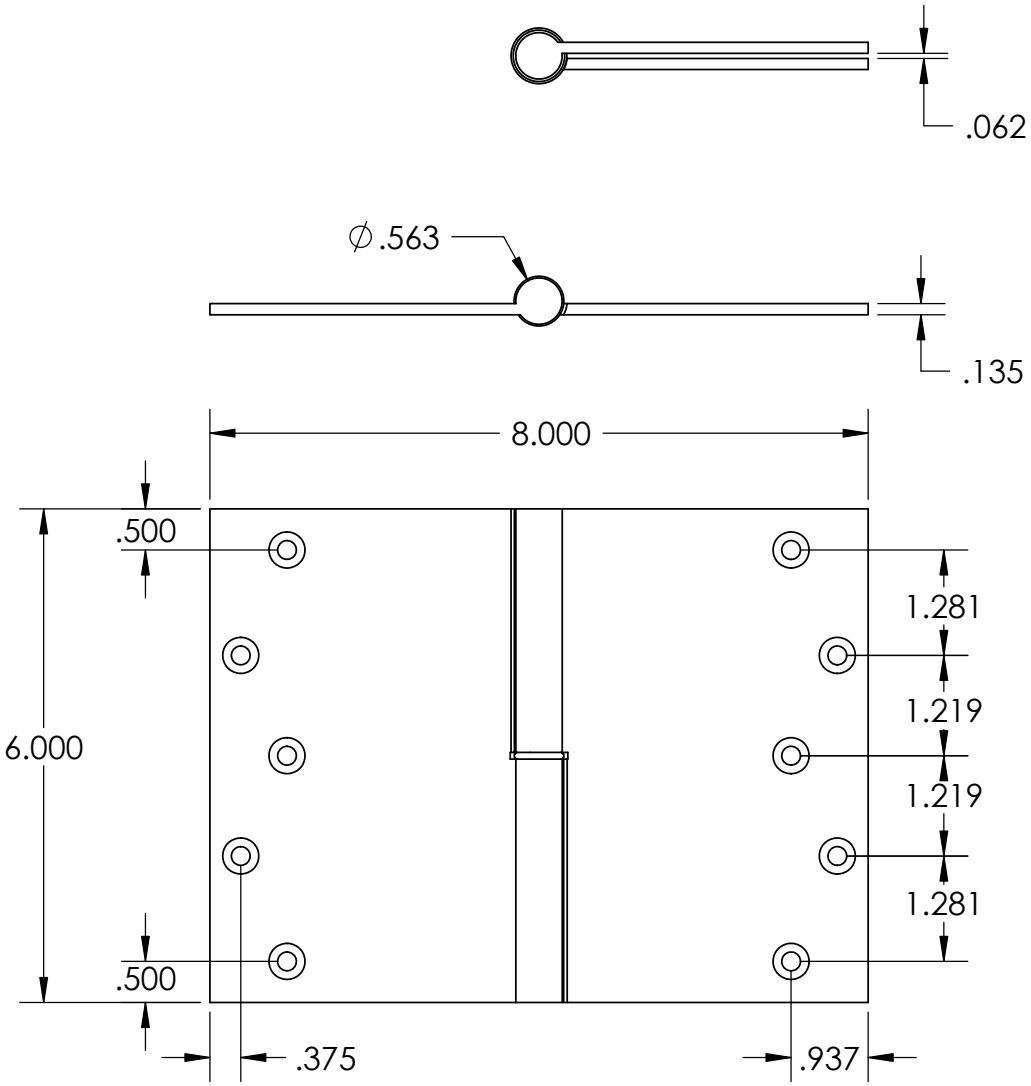

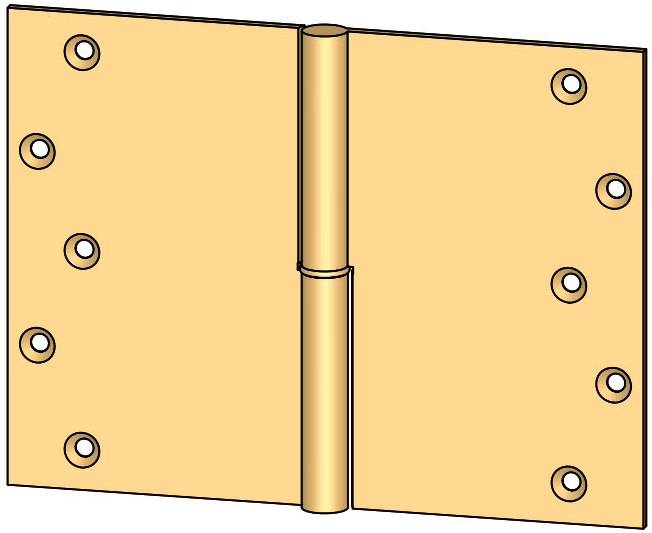

- Specify handing (left hand shown)
- Countersunk for #12 screws
- Available with all standard finials
- Swaged for mortise application

MERIT
EST. 1876
Merit Metal Products Inc.
242 Valley Road
Warrington, PA 18976
P 215-343-2500 F 215-343-4839

The information contained in this drawing is the sole intellectual property of Merit Metal Products. Any reproduction in part or as a whole without the written permission of Merit Metal Products is prohibited.

Unless Otherwise Specified:

Dimensions are in inches

All dimensions are from edge, theoretical sharp corner, or hole center.

	NAME	DATE
Drawn:	AJE	11/08/2019

Comments:

TITLE: **Round Knuckle Lift Off Hinge with Round Bushing - 6" x 8"**

PART. NO.

152RB-6X8-LH
152RB-6X8-RH